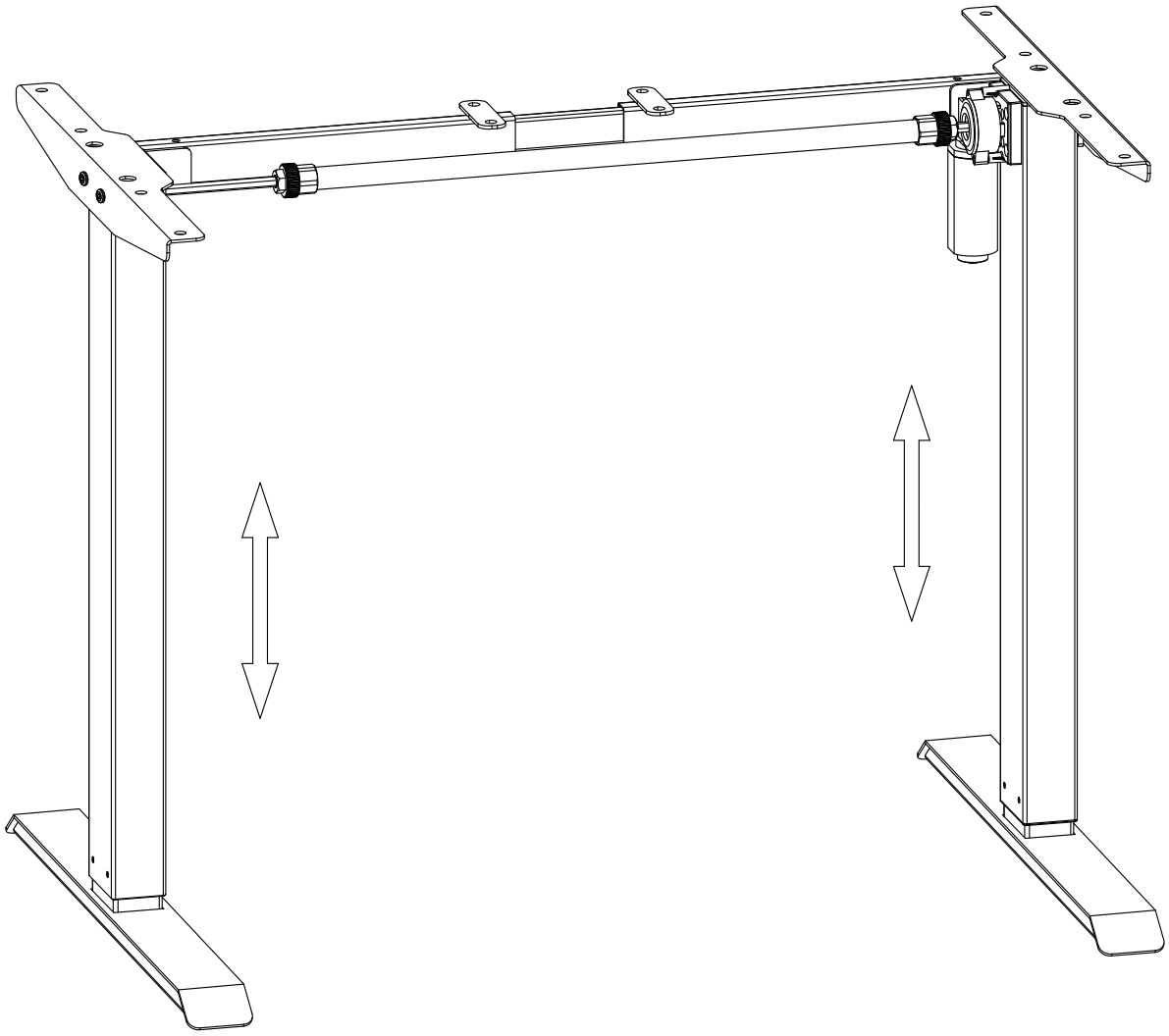

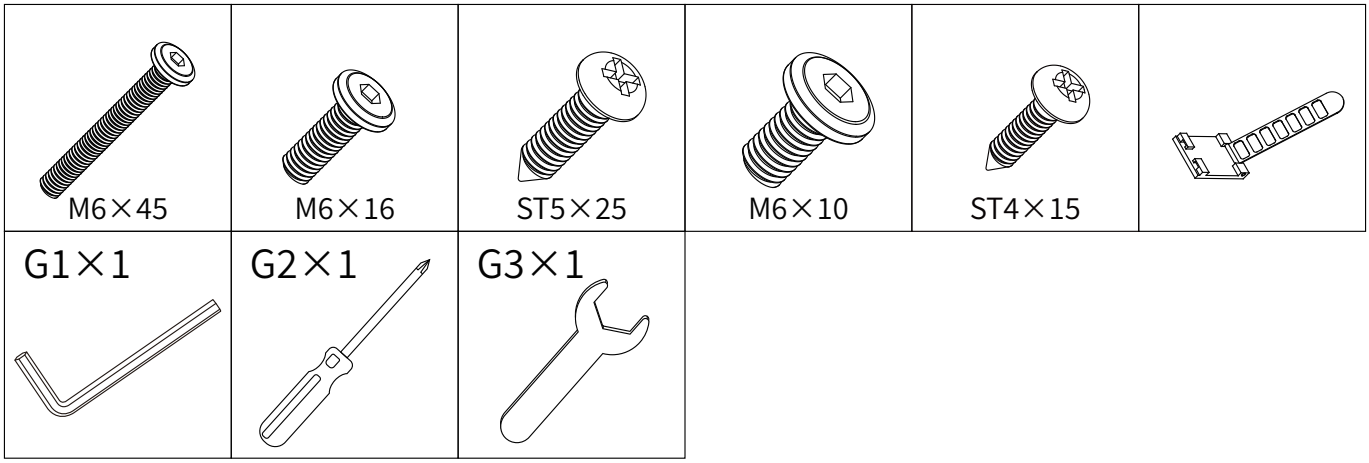
M6×45
M6×16
ST5×25
M6×10
ST4×15
G1×1
G2×1
G3×1

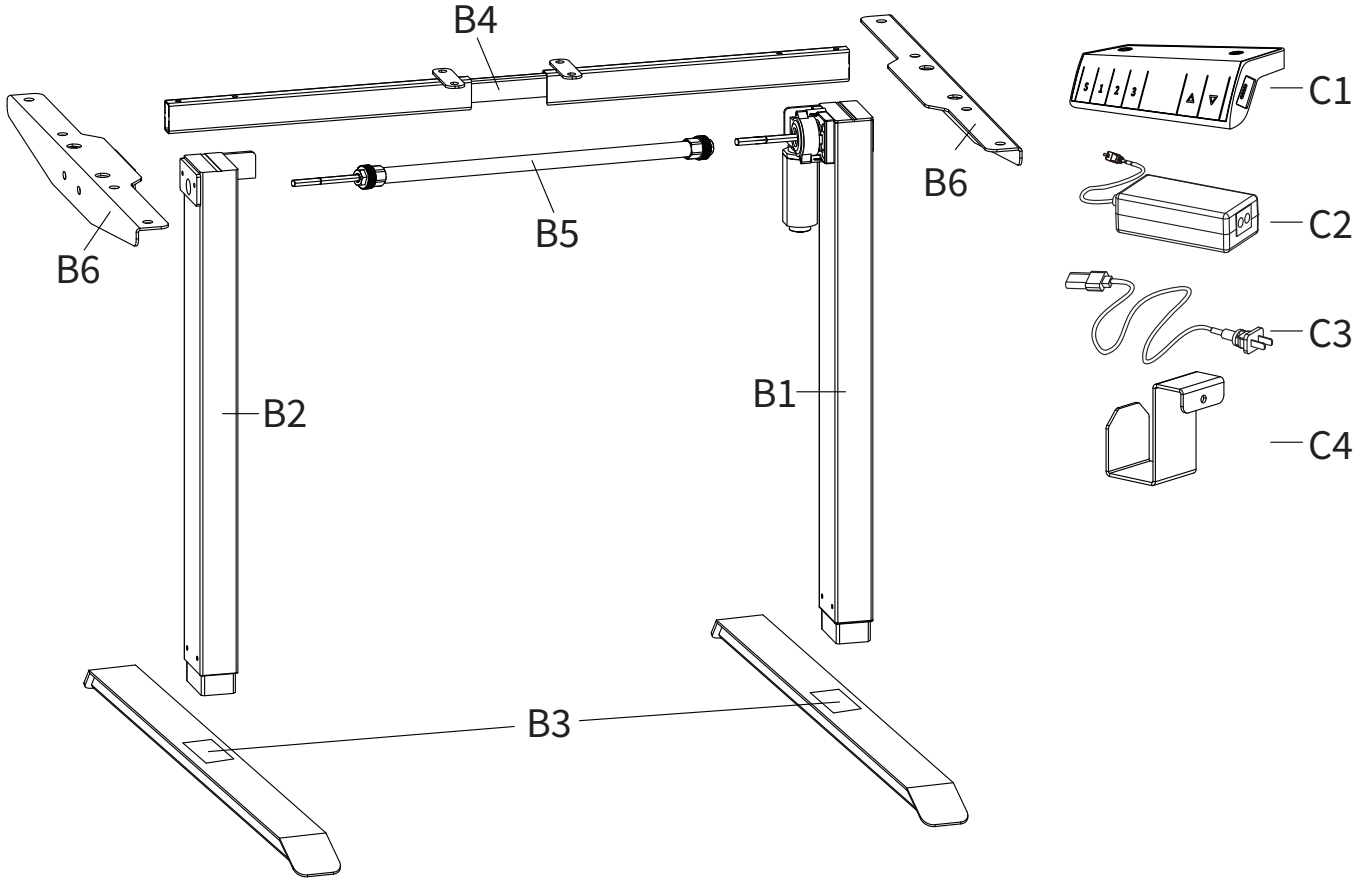
B4
B6
B6
B5
B2
B1
B3
C1
C2
C3
C4

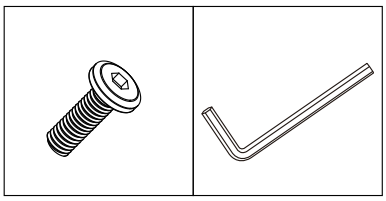

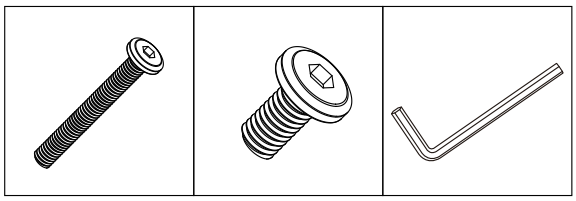

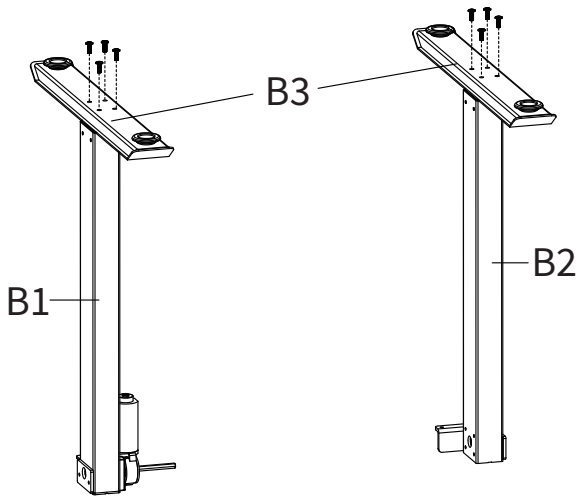
B3
B1
B2

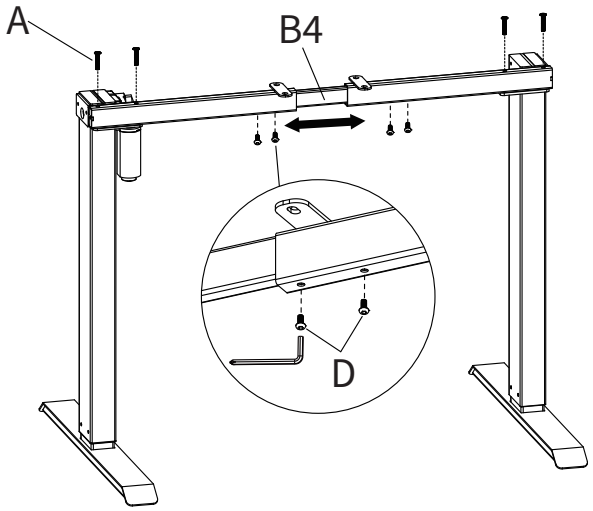
A
B4
D

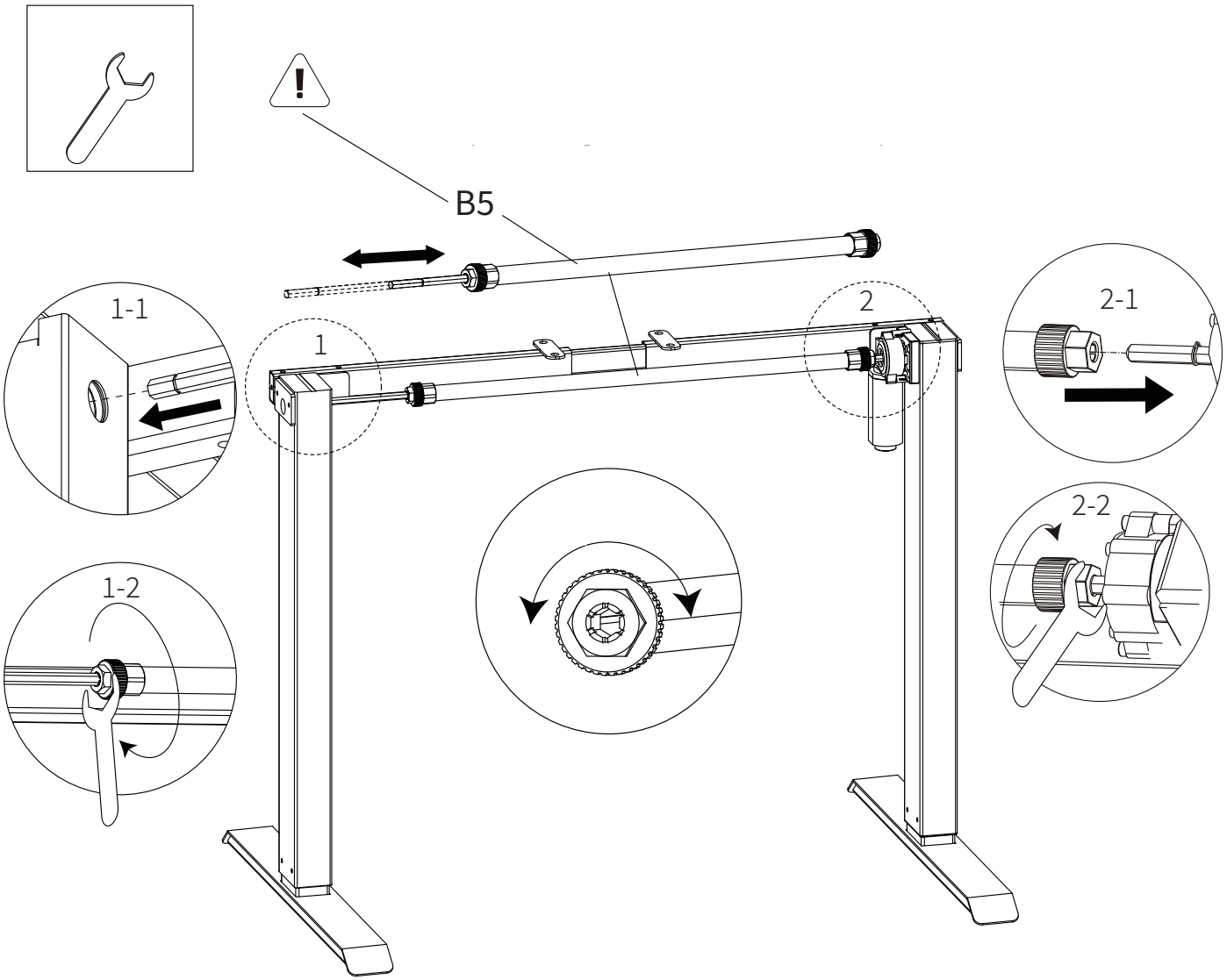
B5
1
1-1
1-2
2
2-1
2-2

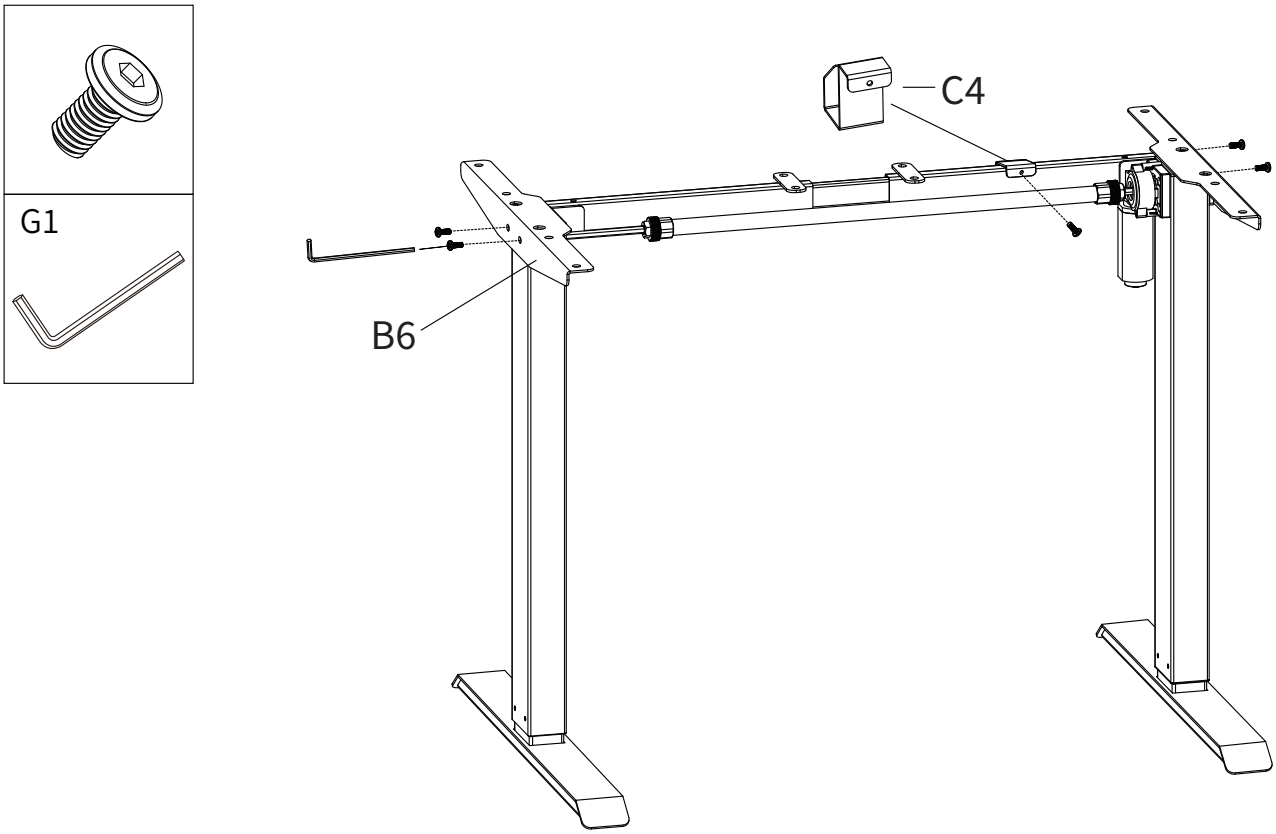
G1
C4
B6

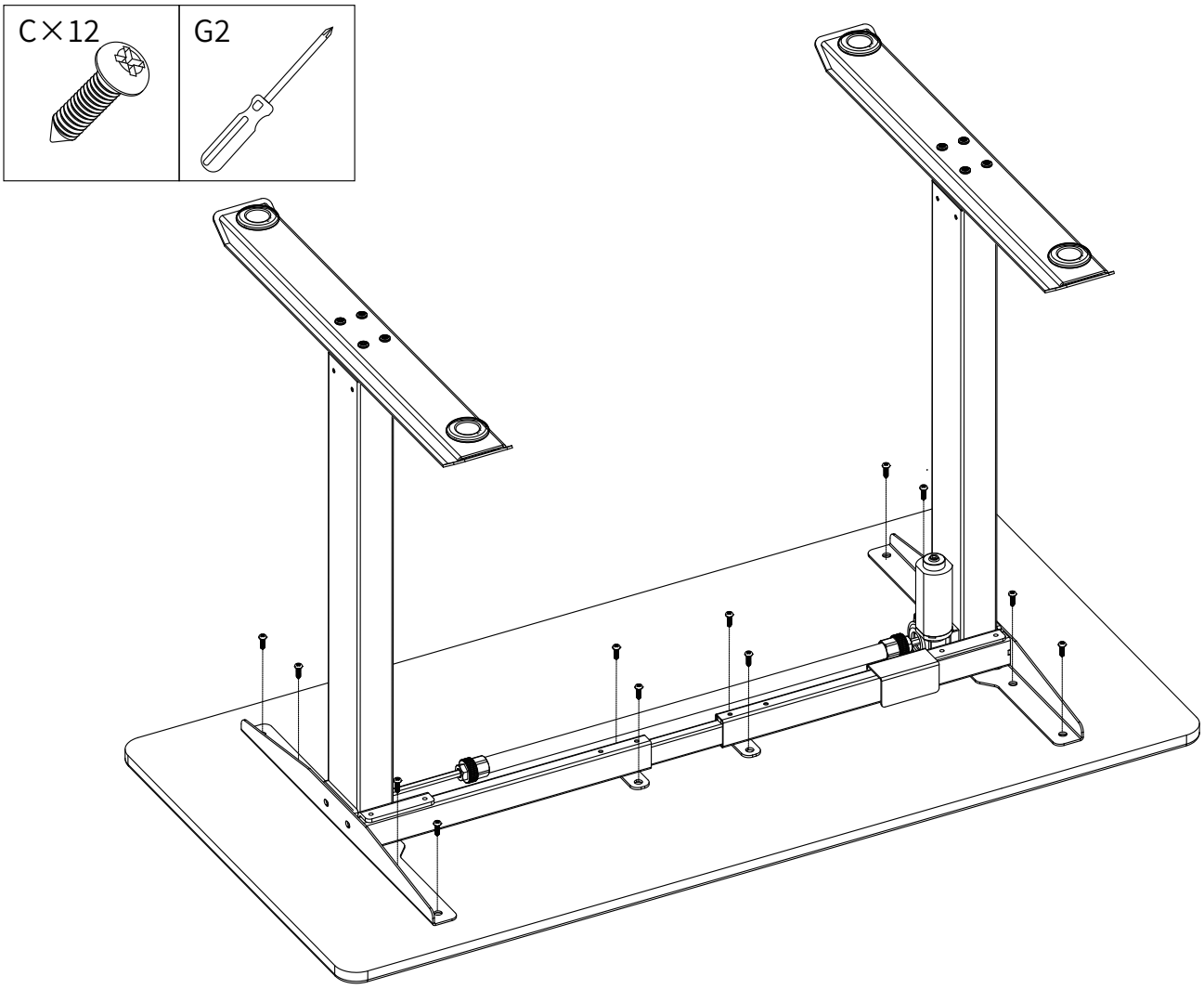
C×12
G2

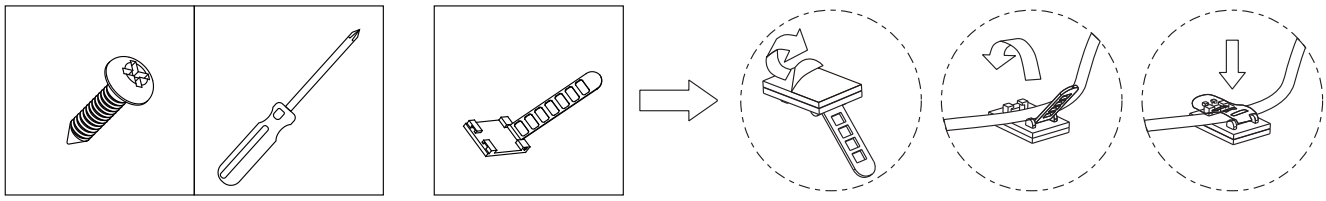

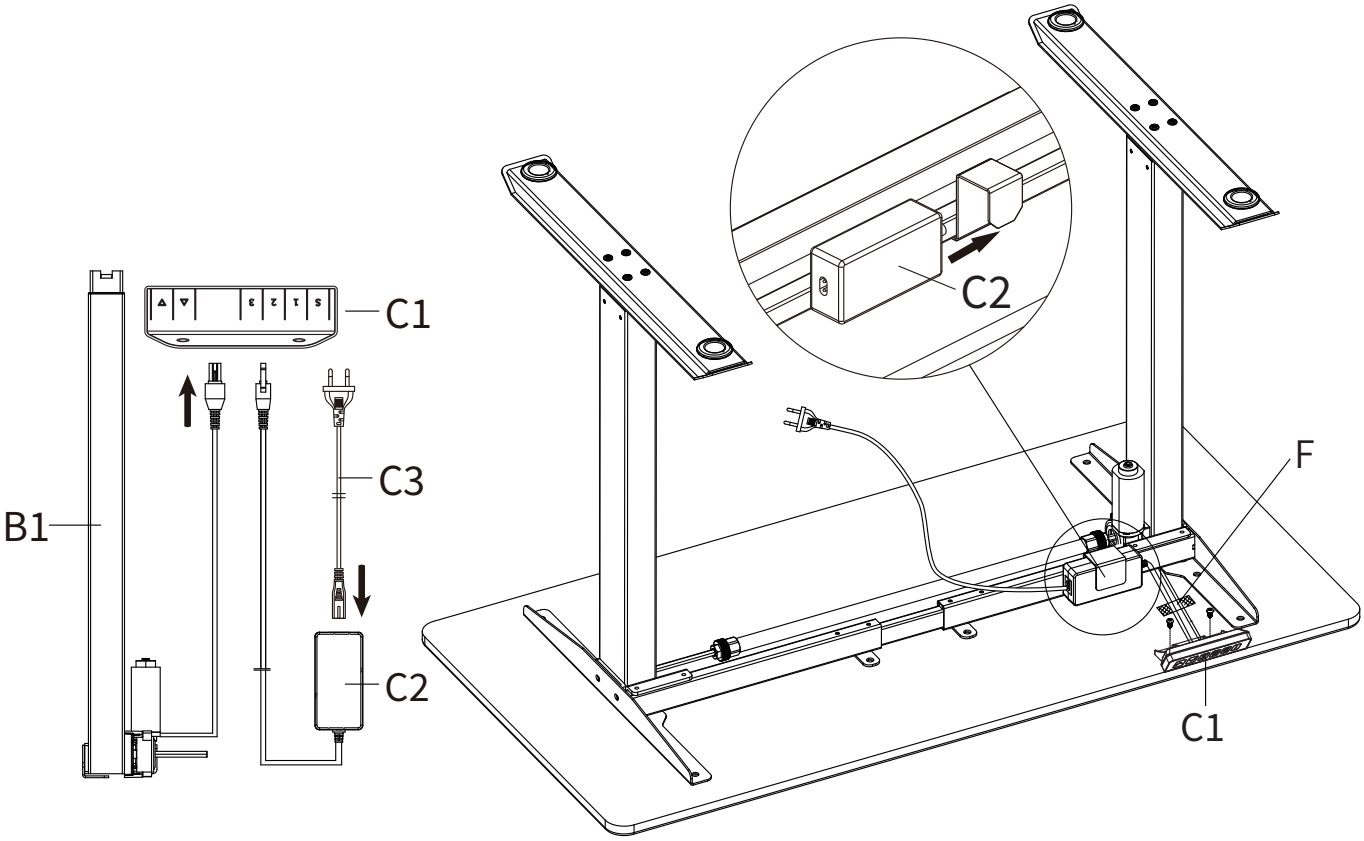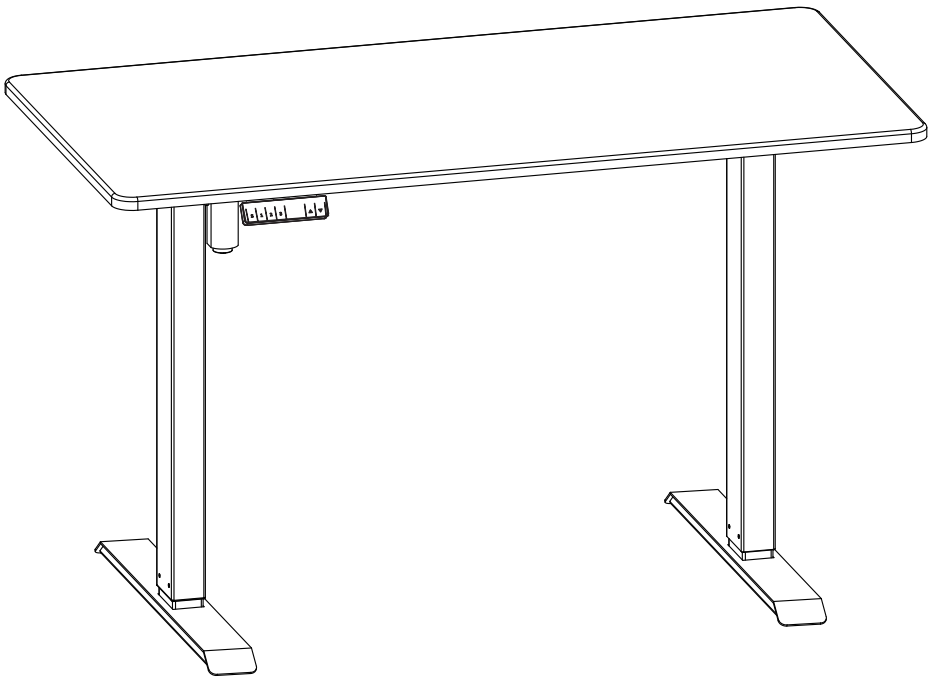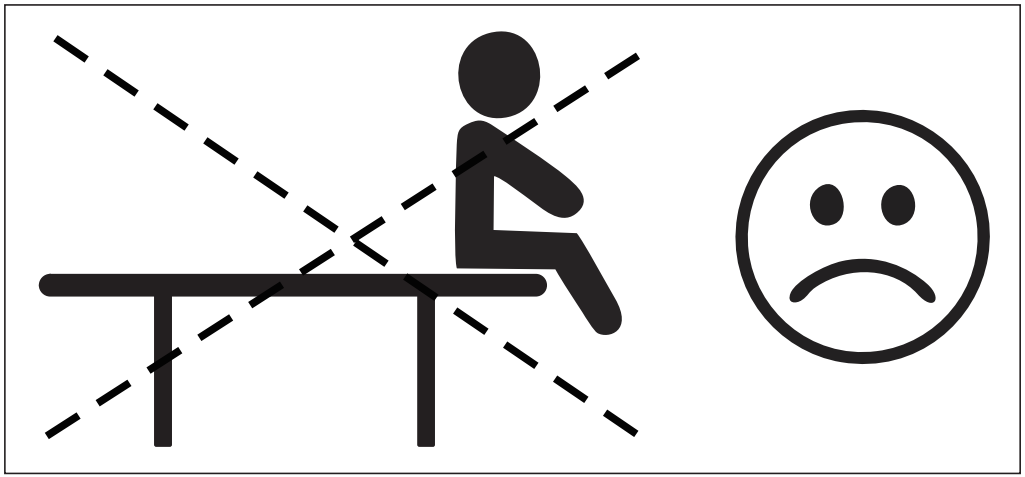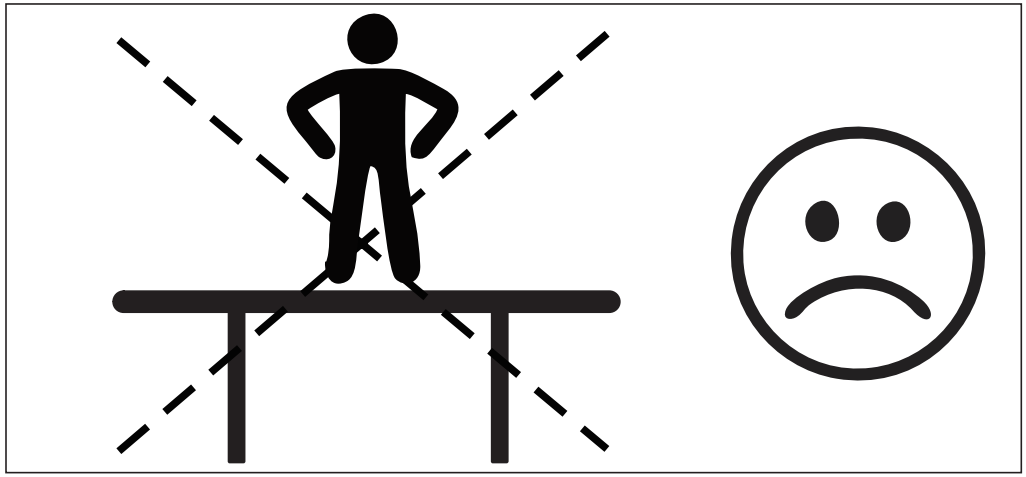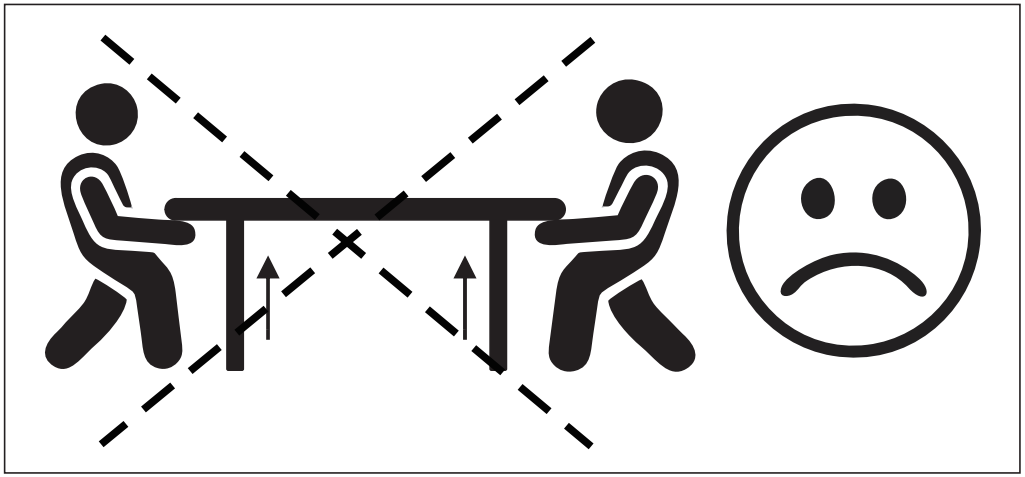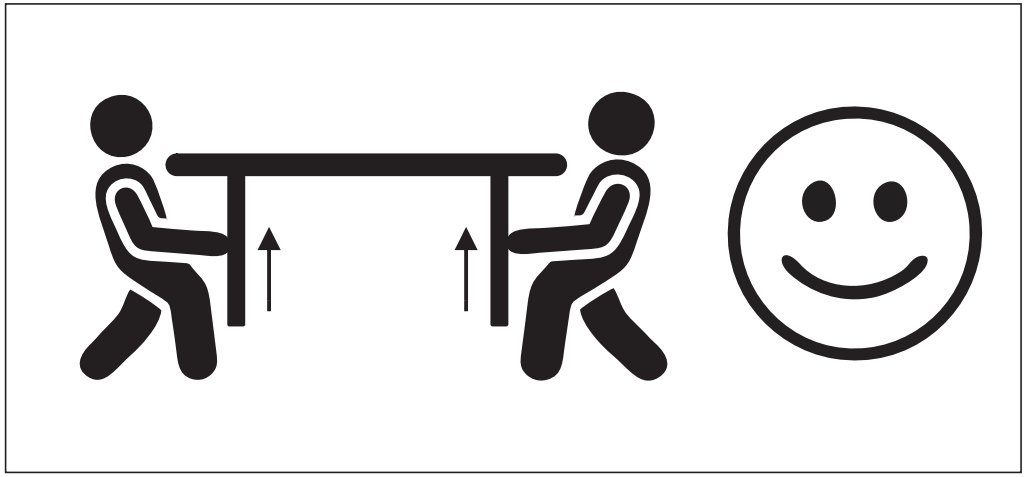
C1
C3
B1
C2
C2
F
C1